PM67296 PM67295 PM67294 2.4V to 5.5V Input, small size 1A/2A/3A Step-Down Power Module with Integrated Inductor

Features

- Input voltage range V_{IN} from 2.4 V to 5.5 V
- Constant on time (COT) Control for fast transient
- PFM/PWM mode or forced PWM mode operation
- 1% Vout accuracy
- Output current up to 3A
- Power good output
- 4MHz switching frequency
- Overcurrent and short circuit protection
- Output discharge function
- Small size 2.0 x 2.5 x 1.1 mm LGA package

Applications

- Optical modules
- Smart phones
- Wearable electronics
- Camera modules
- Industrial IoT (smart sensors) / NB-IoT

Description

The PM67296/95/94 are a family of small size, high efficiency step-down power module optimized for high density application. The device can operate at switching frequency up to 4MHz to reduce the size of external components.

The device has trim option of PFM/PWM mode or forced PWM mode. At PFM/PWM mode, the device transits between PFM and PWM mode automatically to save power at light load condition. At forced PWM mode, the device operates at 4MHz switching frequency.

With 4 selectable output voltage options via trim, the device requires a minimum number of external components for output voltage setting.

The input voltage of PM67296/95/94 is from 2.4V to 5.5V. The output current is up to 3A.

PM67296/95/94 are available in a 2.0mm x 2.5 mm, 10-pin LGA package.

PART NUMBER	PACKAGE	BODY SIZE
PM67296/95/94	LGA-10	2.0 x 2.5 mm

Typical Application Circuit

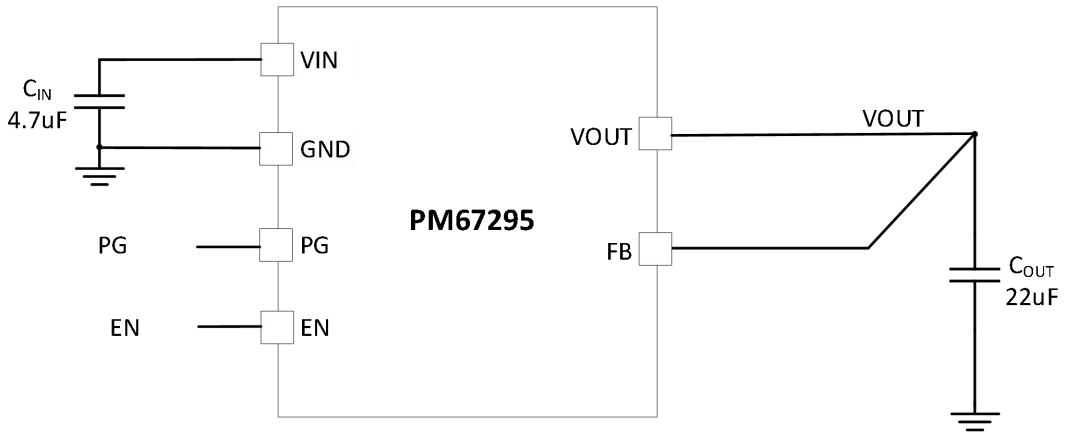

IPG SEMICONDUCTOR (SHENZHEN) CO.,LTD. All rights reserved.